# 3/8" (10mm) DRILL

Model 6407
Model 6408

**IMPORTANT** - To assure product SAFETY and RELIABILITY, repairs, maintenance or adjustments should be performed by **MAKITA** Service Centers or other qualified service organizations. Always use **MAKITA** replacement parts.

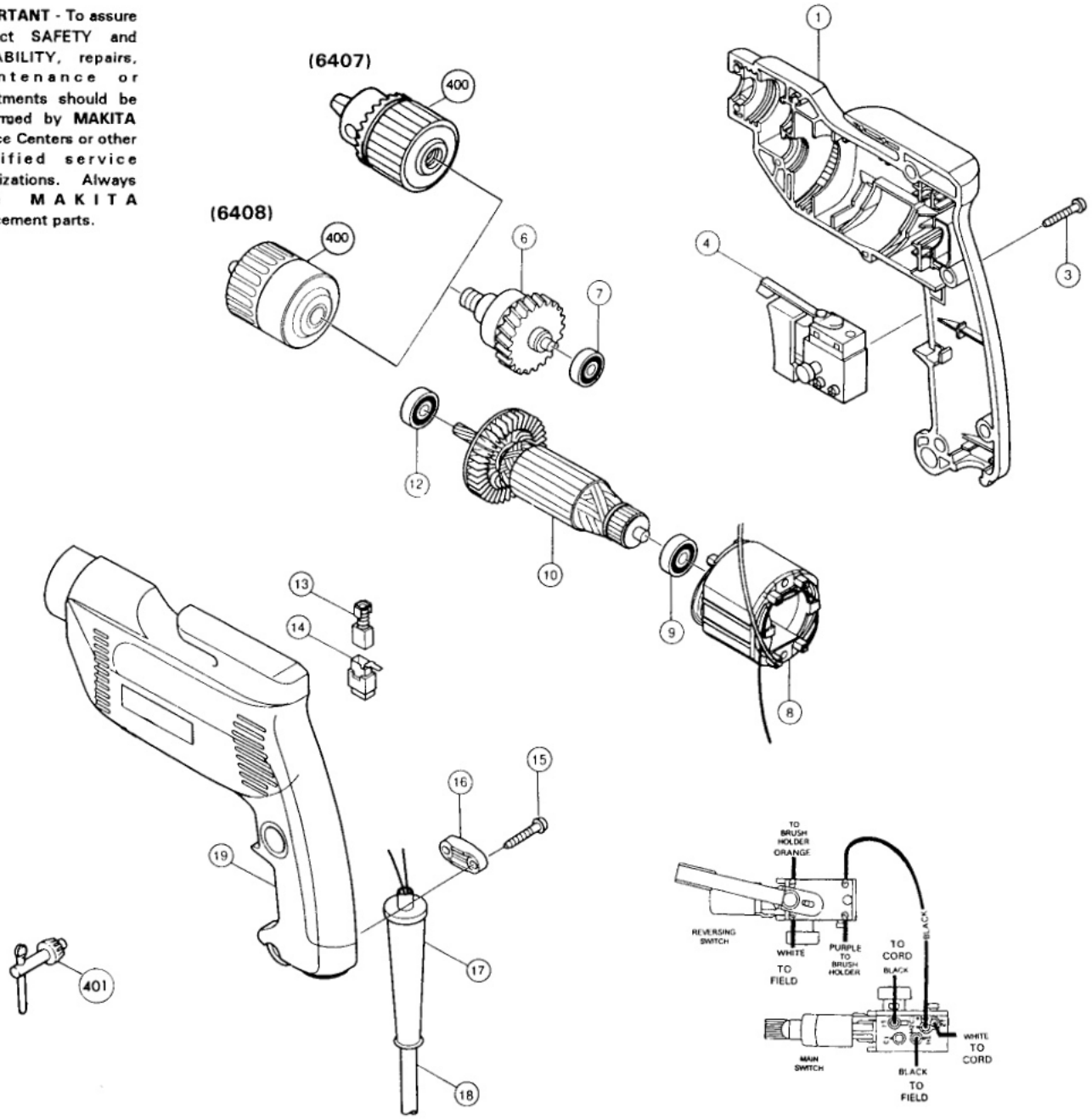


| Fig. | Part No. | Qty. Used | Description |
|---|---|---|---|
| 1 | 182862-9 | 1 | HOUSING SET (Incl. Fig. 19) |
| 3 | 265995-6 | 8 | TAPPING SCREW 4x18 |
| 4 | 651935-4 | 1 | SWITCH |
| 6 | 153246-8 | 1 | GEAR CPL. |
| 7 | 211020-1 | 1 | BALL BEARING 626Z |
| 8 | 633336-8 | 1 | FIELD |
| 9 | 211030-8 | 1 | BALL BEARING 627Z |
| 10 | 517196-5 | 1 | ARMATURE ASS'Y (Incl. Fig. 9 & 12) |
| 12 | 211030-8 | 1 | BALL BEARING 627Z |
| 13 | 191927-6 | 1 | CARBON BRUSH SET, CB-407 |
| 14 | 643923-5 | 2 | BRUSH HOLDER |
| 15 | 265995-6 | 2 | TAPPING SCREW 4x18 |
| 16 | 687063-9 | 1 | STRAIN RELIEF |
| 17 | 682549-8 | 1 | CORD GUARD (6407) |
| | 682502-4 | 1 | CORD GUARD (6408) |
| 18 | 664013-1 | 1 | CORD (2x18x8 SJT) |
| 19 | 182862-9 | 1 | HOUSING SET (Incl. Fig. 1) |

**ACCESSORIES**

| Fig. | Part No. | Qty. Used | Description |
|---|---|---|---|
| 400 | 763085-4 | 1 | DRILL CHUCK S10 WITH KEY, 763423-0 (6407) |
| | 763109-6 | 1 | KEYLESS CHUCK (6408) |
| 401 | 763423-0 | 1 | CHUCK KEY (6407) |